MODEL: M1

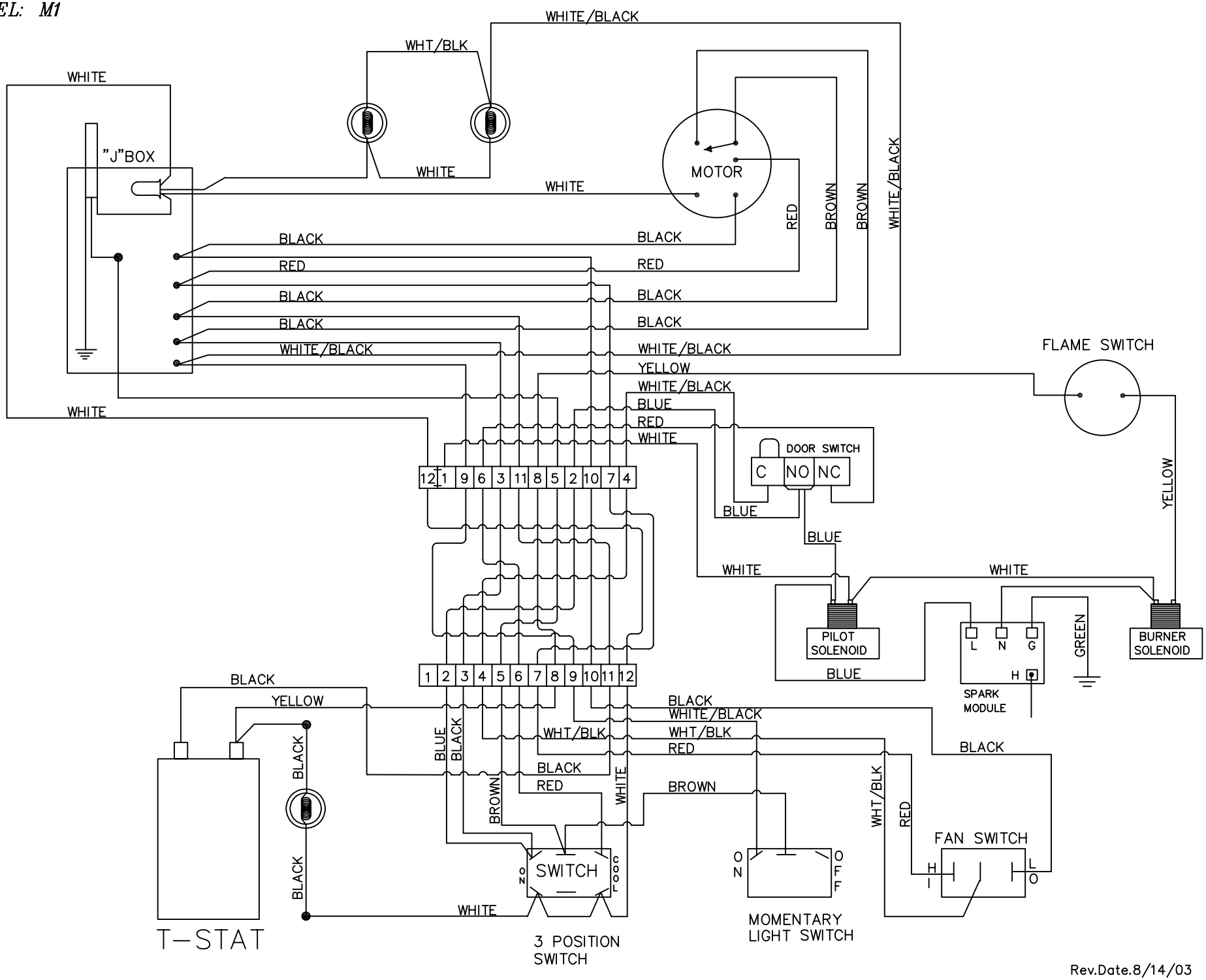

Rev.Date.8/14/03