MODEL: AR6C

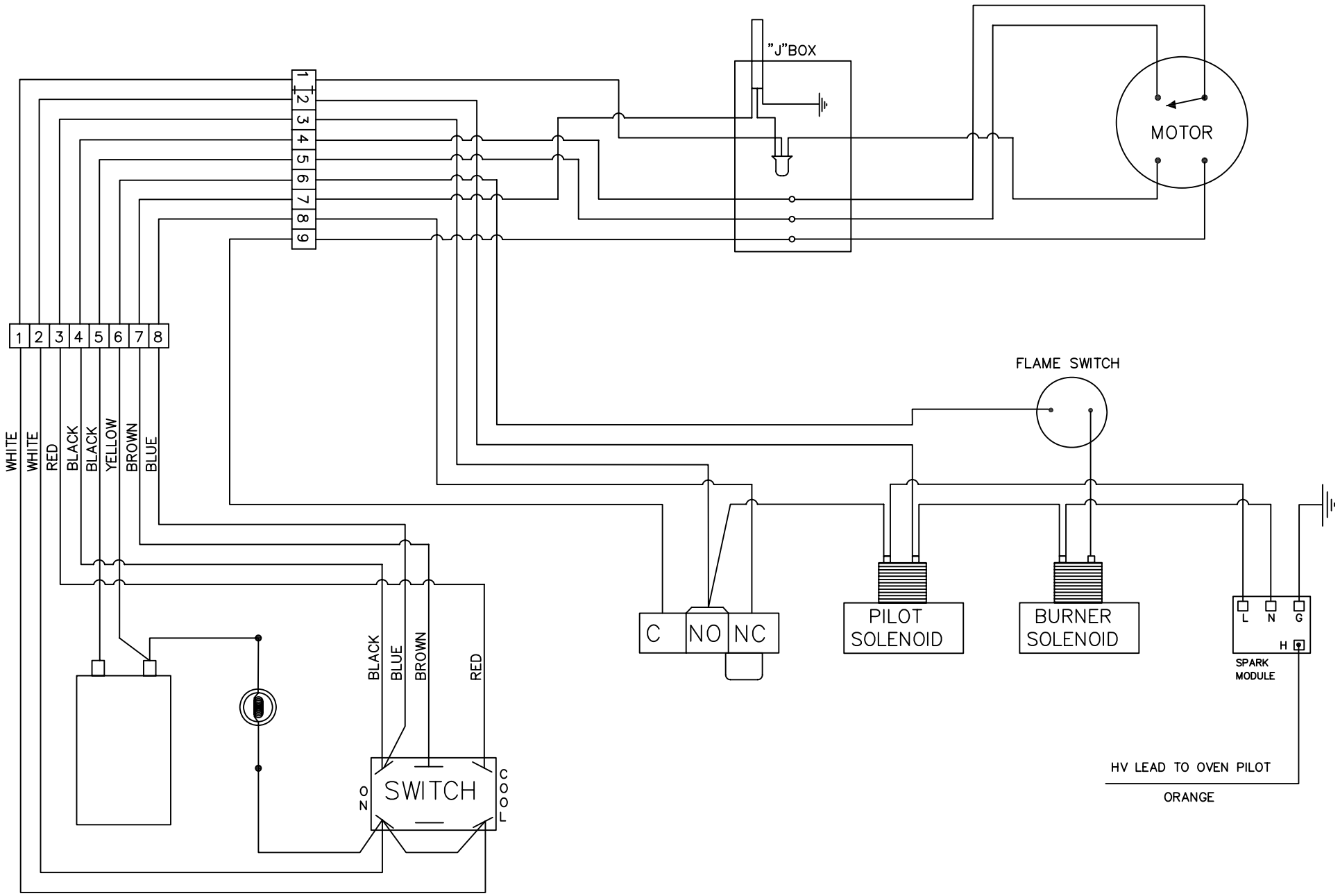
"J"BOX
MOTOR
1 2 3 4 5 6 7 8 9
1 2 3 4 5 6 7 8
WHITE
WHITE
RED
BLACK
BLACK
YELLOW
BROWN
BLUE
FLAME SWITCH
C
NO
NC
PILOT SOLENOID
BURNER SOLENOID
L N G
H
SPARK MODULE
BLACK
BLUE
BROWN
RED
SWITCH
ON
COOL
HV LEAD TO OVEN PILOT
ORANGE