MODEL: AR-CC
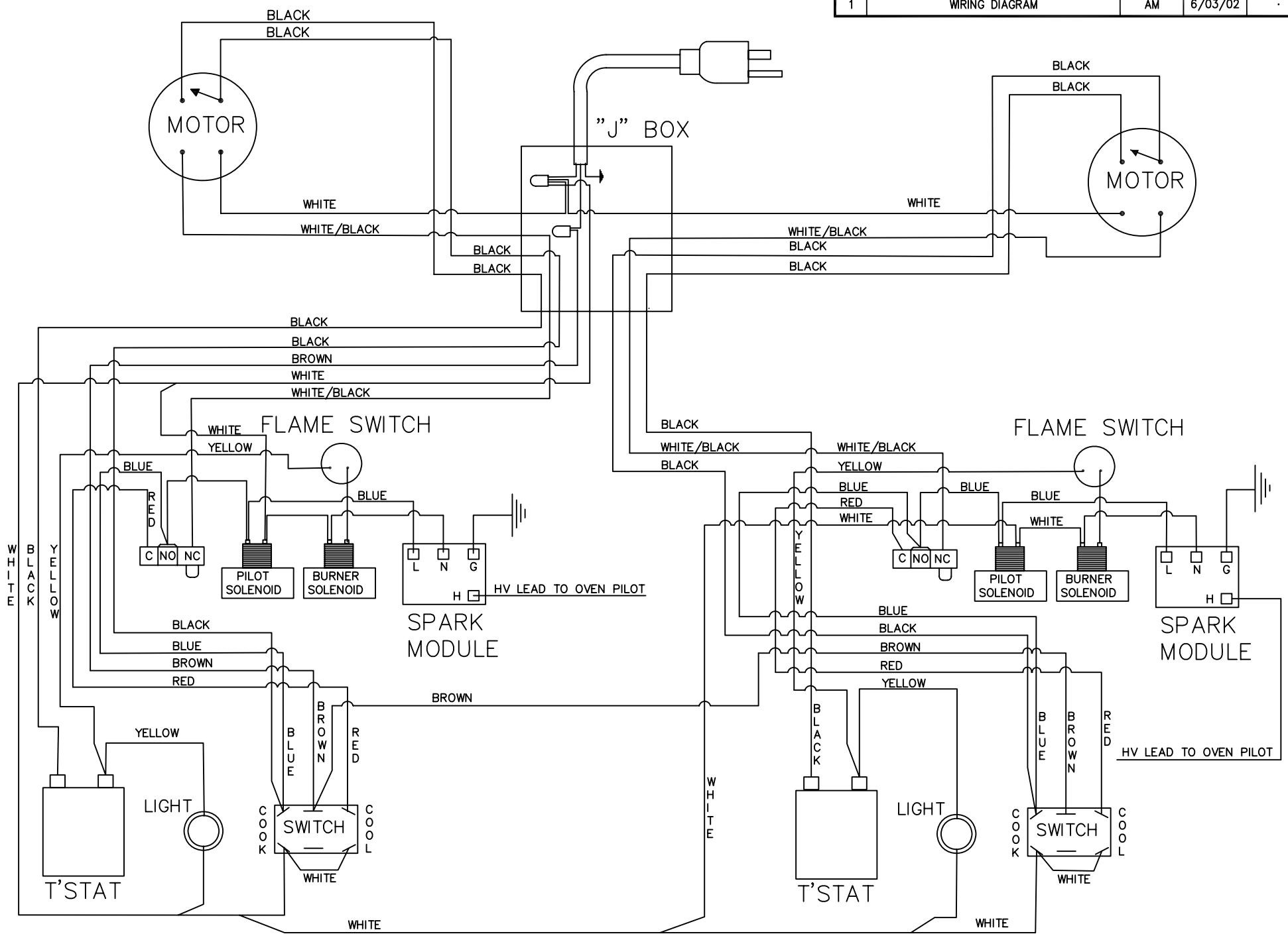
REV	DESCRIPTION	INITIALS	DATE	ECO NO.
1	WIRING DIAGRAM	AM	6/03/02	·